Hard Disk Drive Destruction

When disposing hard disk drives that contain confidential and critical information, such as personal, military, or government related information, one should be absolutely confident that this process is executed in a secure way, making it impossible to retrieve this information after disposal.

By means of a degaussing process, information can be erased from the hard disk. Due to constant new developments in the storage density of the hard disks, the required degaussing power also constantly needs to be increased. In case the degaussing power is too low the information will not or only partly be erased. Furthermore, the degaussing process may also be subject to possible machine failure or human errors. By means of visual inspection of the hard disk drives only, it is impossible to check whether the information has been erased or not.

Independent of the degaussing process, the mechanical destruction of hard disk drives will provide a 100% proof that the hard disk drives has been destroyed by simply looking at the end result, being shreds. Destroying hard disk drives in this way is relatively fast, as the hard disk drives are dropped directly into the shredding system.

Mechanical destruction of the hard disk drives will not erase the information itself and whether information can be retrieved from the shreds will depend on the shred size.

HDS Hard Disk Shredder

The HDS shredder is a robust system designed to destroy complete intact hard disk drives without any preparation of the hard disk drive. The complete hard drive, including the casing, can be dropped directly into the destruction unit via a feeding opening.

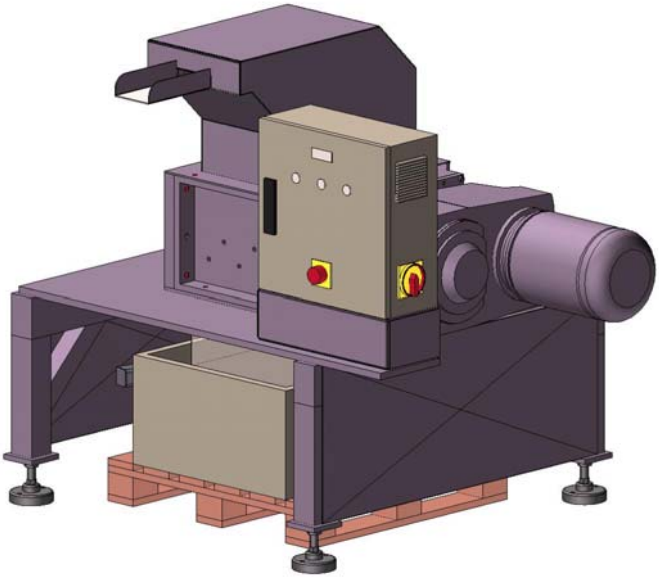

The slow rotating cutters will cut the hard drive in strips of approx. 19 mm wide and deform the parts including the internal disk which contains the actual data, see picture below. The heavily deformed shreds are collected in a box below the shredder.

<u>Technical specifications:</u>

Method:	Shredding of complete intact hard disk drives
Capacity:	180 to 240 hard disks per hour, including casing
Cutter width:	19 mm